PART NUMBER	ITEM ① BODY	ITEM ② CONTACT	ITEM ③ INSULATOR	ITEM ④ NUT
142-0694-051	BRASS GOLD PL .00001 MIN OVER NICKEL PL .00005 MIN OVER COPPER PL .00005 MIN	BRASS GOLD PL .00005 MIN OVER NICKEL PL .00005 MIN OVER COPPER PL .00005 MIN	TEFLON	BRASS GOLD PL .00001 MIN OVER NICKEL PL .00005 MIN OVER COPPER PL .00005 MIN
142-0694-056	BRASS NICKEL PL .0001 MIN OVER COPPER PL .00005 MIN	BRASS GOLD PL .00005 MIN OVER NICKEL PL .00005 MIN OVER COPPER PL .00005 MIN	TEFLON	BRASS NICKEL PL .0001 MIN OVER COPPER PL .00005 MIN

DRAWING NO.
C - 142-0694-051/060

0	REVISIONS				
ENGINEERING RELEASE					
1	12-18-92	RH	RP	RB	RK	ECO 41354

.085+-.005

CABLE STRIP DIMENSIONS

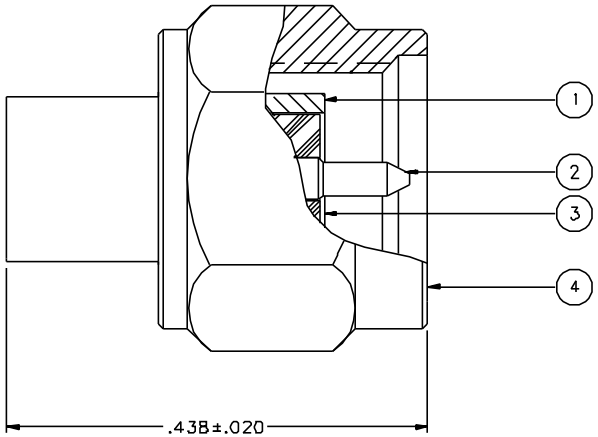

NOTES:

1. SPECIFICATIONS:

IMPEDANCE: 50 OHMS
FREQUENCY RANGE: 0-18 GHZ
VSWR: 1.05+.0DBF MAX (F IN GHZ)
WORKING VOLTAGE: 500 VRMS MAX AT SEA LEVEL
DIELECTRIC WITHSTANDING VOLTAGE: 1500 VRMS MIN AT SEA LEVEL
INSULATION RESISTANCE: 5000 MEGOHM MIN
CONTACT RESISTANCE:
CENTER CONTACT - INITIAL 2.0 MILLIOHM MAX, AFTER ENVIRONMENTAL 4.0 MILLIOHM MAX
OUTER CONDUCTOR - INITIAL 0.5 MILLIOHM MAX, AFTER ENVIRONMENTAL NOT APPLICABLE
BODY TO CABLE - 0.5 MILLIOHM MAX
CORONA LEVEL: 375 VOLTS MIN AT 70,000 FEET
INSERTION LOSS: .03 $\sqrt{F}$ (F IN GHZ) AT 10 GHZ
RF LEAKAGE: -90 DB MIN AT 2.5 GHZ
RF HIGH POTENTIAL WITHSTANDING VOLTAGE: 1000 VRMS AT 4 AND 7 MHZ

MECHANICAL:

ENGAGE/DISENGAGE TORQUE: 2 INCH-POUNDS MAX
MATING TORQUE: 7-10 INCH POUNDS
COUPLING PROOF TORQUE: 15 INCH-POUNDS MIN
COUPLING NUT RETENTION: 60 LBS MIN
CONTACT RETENTION: NOT APPLICABLE
CABLE ACCEPTABILITY: RG 402 DIA .141 SEMI RIGID
CABLE HEX CRIMP SIZE: NOT APPLICABLE
CABLE RETENTION: 60 LBS MIN AXIAL FORCE
55 INCH-OUNCE MIN TORQUE
DURABILITY: 500 CYCLES MIN

ENVIRONMENTAL:

(MEETS OR EXCEEDS THE APPLICABLE PARAGRAPH OF MIL-C-39012)
THERMAL SHOCK: MIL-STD-202, METHOD 107, CONDITION B,
EXCEPT 175 C HIGH TEMP
OPERATING TEMPERATURE: -65 DEG C TO 165 DEG C
CORROSION: MIL-STD-202, METHOD 101, CONDITION B
SHOCK: MIL-STD-202, METHOD 213, CONDITION I
VIBRATION: MIL-STD-202, METHOD 204, CONDITION D
MOISTURE RESISTANCE: MIL-STD-202, METHOD 106

CUSTOMER DRAWING

THIS DRAWING TO BE INTERPRETED PER ANSI Y 14.5M - 1982

"μSTATION"

COMPANY CONFIDENTIAL

TOLERANCE UNLESS OTHERWISE SPECIFIED		DRAWN BY VET	DATE 9-17-92	JOHNSON a cinch connectivity solutions brand	Cinch Connectivity Solutions 299 Johnson Ave. Ste. 100 Waseca, MN 56093 1-800-247-8256
DECIMALS .XX	mm	CHECKED BY	DATE	TITLE PLUG ASSEMBLY STRAIGHT CABLED SMA, RG 402	
.XXX		APPROVED BY VET	DATE 12-22-92		
MATL		APPROVED BY TAK/RJB	DATE 12-30-92	CODE NO.	DRAWING NO. C - 142-0694-051/060
FINISH		RELEASE DATE		SCALE 10:1	U/M INCH SHEET 2 OF 2