PART NO. MDSHIRA

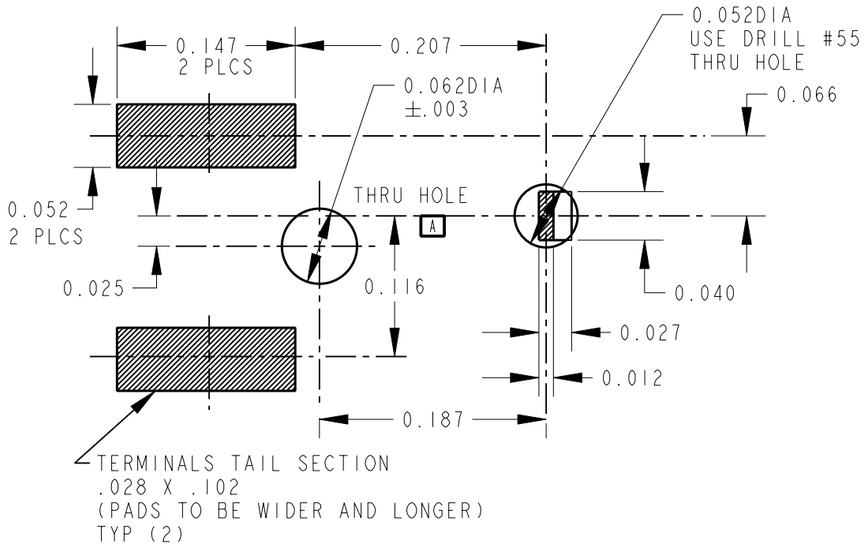

RECOMMENDED FOOTPRINT

COMPONENT SIDE

SCALE = 8 : 1

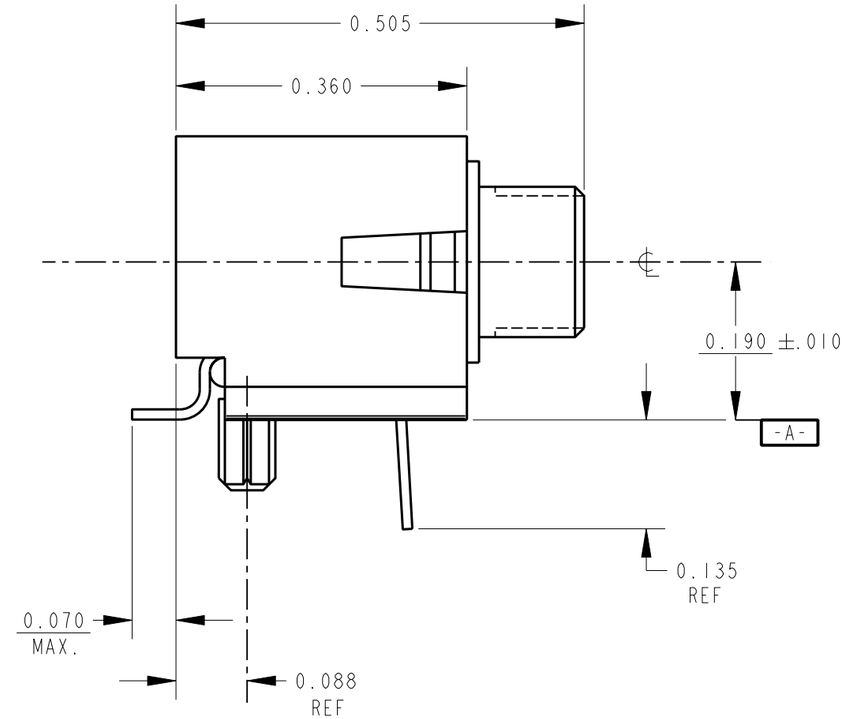

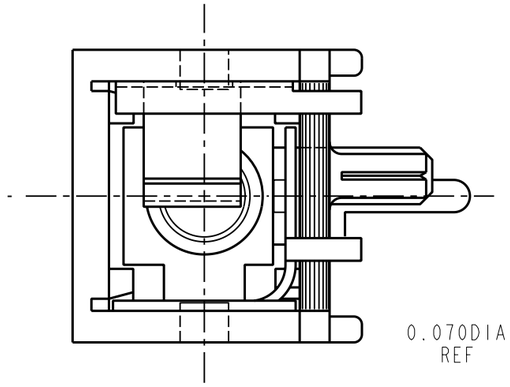

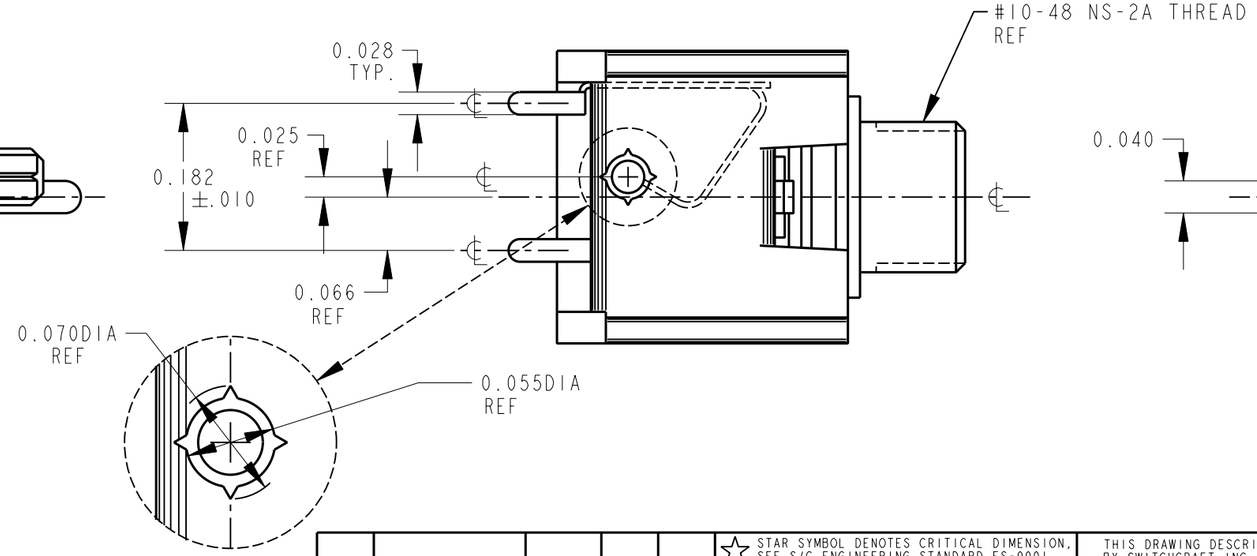

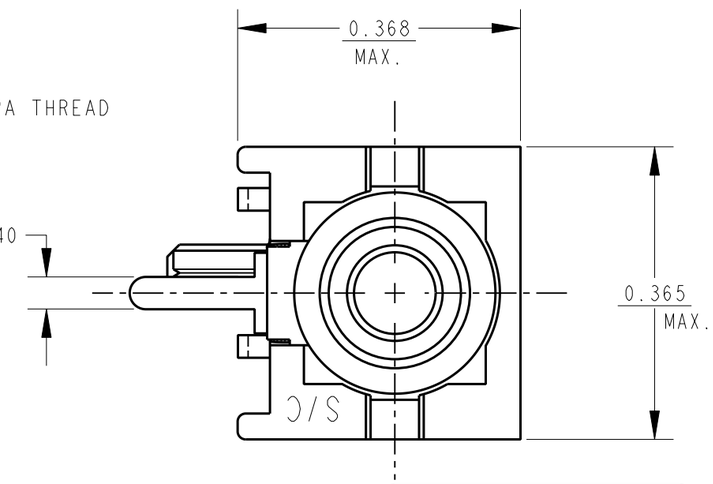

CUSTOMER DRAWING

CAD/CAM DWG. NO.
MDSHIRA_CD

SHEET 1 OF 1

NOTES:

1. MATERIAL AND FINISHES:
   - -HOUSING LIQUID CRYSTAL POLYMER U.L. RECOGNIZED 94 V-0.
   - -THREADED BUSHING: BRASS ALLOY NICKEL PLATED.
   - -TIPSPRING: PHOS. BRONZE ALLOY SELECTIVE PLATE: NICKEL AND TIN-LEAD.
   - -SLEEVE/GROUND TERMINAL, BRASS ALLOY TIN-LEAD W/NICKEL UNDERPLATE.

ISSUE	CHANGE NO.	DATE	BY	APP'D
A	FIRST DRAWN	4-22-94	ES	EBR

REVISIONS

☆ STAR SYMBOL DENOTES CRITICAL DIMENSION, SEE S/C ENGINEERING STANDARD ES-0001

UNLESS OTHERWISE SPECIFIED

1. ALL DIMENSIONS IN INCHES
2. DECIMAL DIMENSIONS ±.005
3. FRACTIONAL DIMENSIONS ±1/64
4. ANGLES ±1/2°
5. ALL DIA'S CONCENTRIC WITHIN .005 T.I.R.
6. REMOVE ALL BURRS
7. MAKE NO DIMENSIONAL ALLOWANCES FOR APPLIED FINISHES, I.E., PLATING, PAINTING, ETC.
8. HOLES ON THE SAME CENTERLINE MUST BE ALIGNED WITHIN ±.002

DO NOT SCALE DRAWING

THIS DRAWING DESCRIBES A DESIGN CONSIDERED PROPRIETARY IN NATURE, DEVELOPED AND MANUFACTURED BY SWITCHCRAFT INC. AND IS RELEASED ON A CONFIDENTIAL BASIS FOR IDENTIFICATION PURPOSE ONLY.

SIZE	WIDTH	MULT	LBS./M	TEMPER

FINISH
SPEC. NO.

MATERIAL
SPEC. NO.

FIRST USED ON
.

SCALE
1:.1875

Switchcraft®

DATE DRAWN	BY	CHK'D	APP'D
4-22-94	ES	ES 5-6-94	EBR 5-6-94

NAME
MICRO JACK
SURFACE MOUNT

PART NO.
MDSHIRA

ISSUE
A

Pro/Engineer CAD File

B

ROUTING