SHEET OF

TOP VIEW -SHOW ORIENTATION OF LEGENDS
IN RESPECT TO THE PCB PIN TERMINALS.

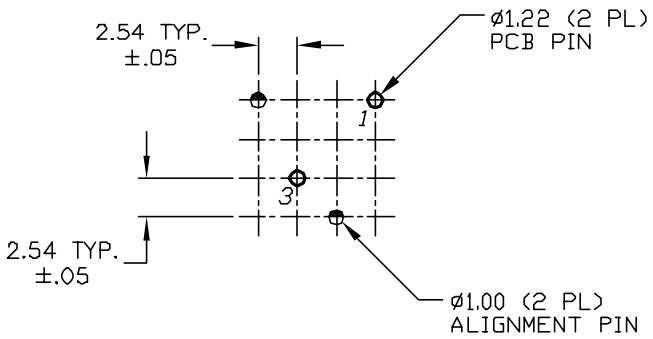


RECOMMENDED P.C.B. LAYOUT

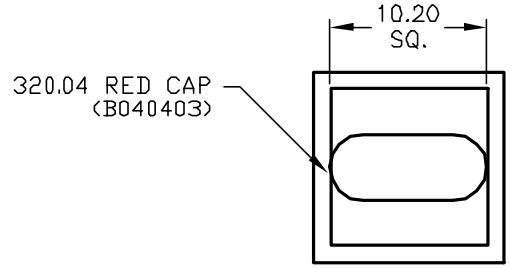


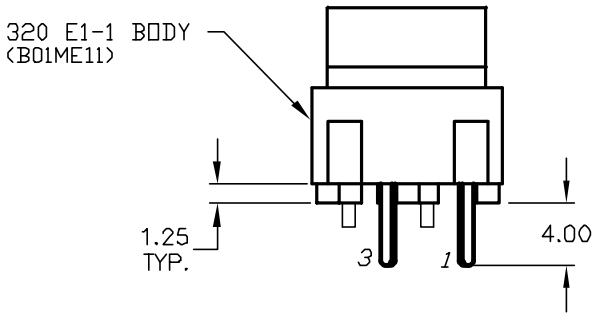


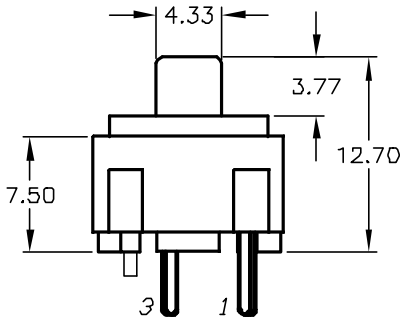


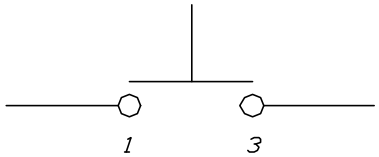


CIRCUIT: SPST
CONTACT CONFIGURATION

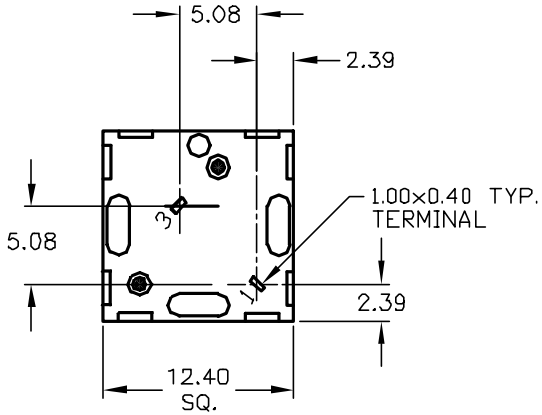


NOTES:
1. ALL DIMINSIONS IN MM
2. GENERAL TOLERANCE: X.X=±0.4
   X.XX=±0.25
3. TERMINAL NO'S FOR REFERENCE ONLY.
4. RATING: 25mA, @50VDC
5. OPERATING FORCE: 120gF
6. TRAVEL TO MAKE: 0.7mm

| REV. | ECN No. | DESCRIPTION | DATE | CHKD |
|---|---|---|---|---|
| A | 11878 | RELEASED FOR PRODUCTION | 7/19/02 | CJB |

THE INFORMATION CONTAINED IN THIS DOCUMENT
IS PROPRIETARY TO E-SWITCH AND IS
NOT TO BE COPIED OR TRANSFERRED

E-SWITCH®

TITLE 320.04 E1-1 RED (HORIZONTAL)

| SCALE | DATE | DR | DWG | REV |
|---|---|---|---|---|
| 2:1 | 12/21/01 | CB | XB0762P | A |