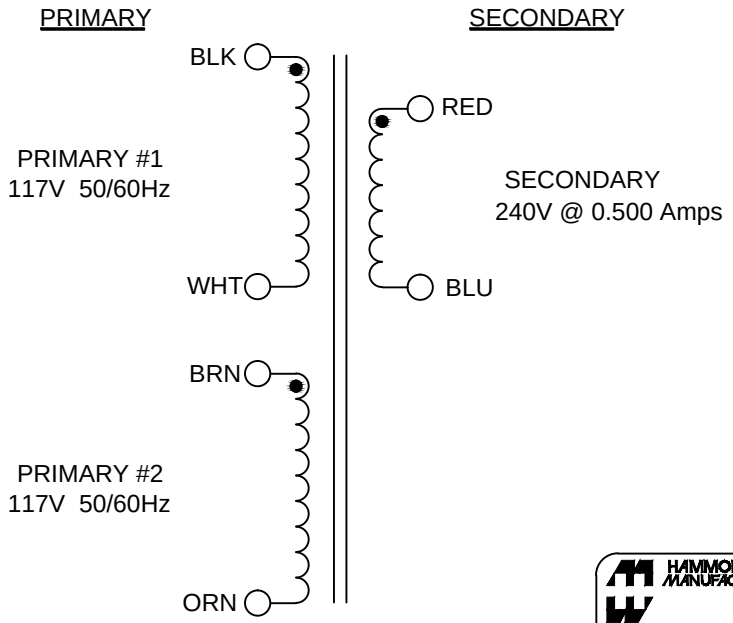

PRIMARY LEADS ARE #20 TEW

SECONDARY LEADS ARE #20 TEW

ALL LEADS OUT 8"-9" AND
STRIPPED 0.5" MIN.

WEIGHT: 2.95Lbs +/- 4%

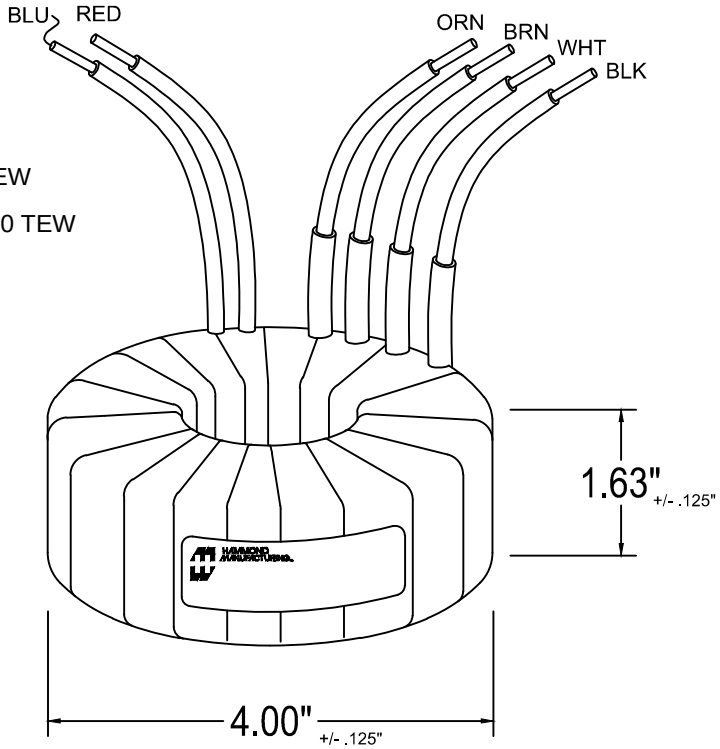

HAMMOND MANUFACTURING

1182G240

50/60Hz VA:120

PRI: 2x 117V BLK-WHT, BRN-ORN
SEC: 1x 240V @ 0.500A RED-BLU

RoHS Compliant

1A0120A000A000240

MADE IN CANADA DATE PB

SUPPLIED WITH: TWO 0.062" T X 2.50" OD RUBBER WASHERS.
ONE 18GA X 2.375" OD STEEL MOUNTING WASHER.
ONE 10-24 BOLT 2.00" LONG WITH A LOCK WASHER AND 10-24 HEX NUT.

ELECTRICAL DATA:

TESTS	CONDITIONS	ACCEPTANCE CRITERIA
Sec. N.L.V	@ 117V, 60Hz	
	BLK & BRN to WHT & ORN	
OR	@ 234V, 50Hz	
	BLK to ORN (Connect BRN & WHT)	
	RED - BLU	258.96 V ±2%
POLARITY	BLK, BRN and RED.	ADDITIVE
DCR	BLK - WHT	5.100 Ohms ±20%
IN OHMS	BRN - ORN	5.100 Ohms ±20%
	RED - BLU	14.360 Ohms ±20%
HIPOT	PRIMARY - SECONDARY	4000V, 60Hz, 1 SEC
	PRIMARY - PRIMARY	600V, 60Hz, 1 SEC

PROPERTY AND COPYRIGHT NOTICE

THIS DRAWING AND THE INFORMATION IT CONVEYS ARE THE PROPERTY OF HAMMOND MANUFACTURING. IT MAY NOT BE REPRODUCED, TRANSMITTED OR USED IN ANY MANNER WHATSOEVER WITHOUT THE WRITTEN PERMISSION OF HAMMOND MANUFACTURING.

REV	NOTES	BY	DATE

HAMMOND MANUFACTURING
ELECTRONIC DIVISION
52 RANKIN PLACE,
WATERLOO, ONTARIO, N2J 3Z5
PHONE: 519.886.6181 FAX: 519.886.9540

TOROID POWER TRANSFORMER

DRAWN	DATE	NUMBER
G. GRAY	21/03/2014	1182G240
APPROVED	DATE	